EASY and QUICK CLEANING

Thanks to the **integrated ball valve and the optional non return valve**, it is possible to intercept only the fluid present in the dirt separator. It is therefore not necessary to completely empty the system.

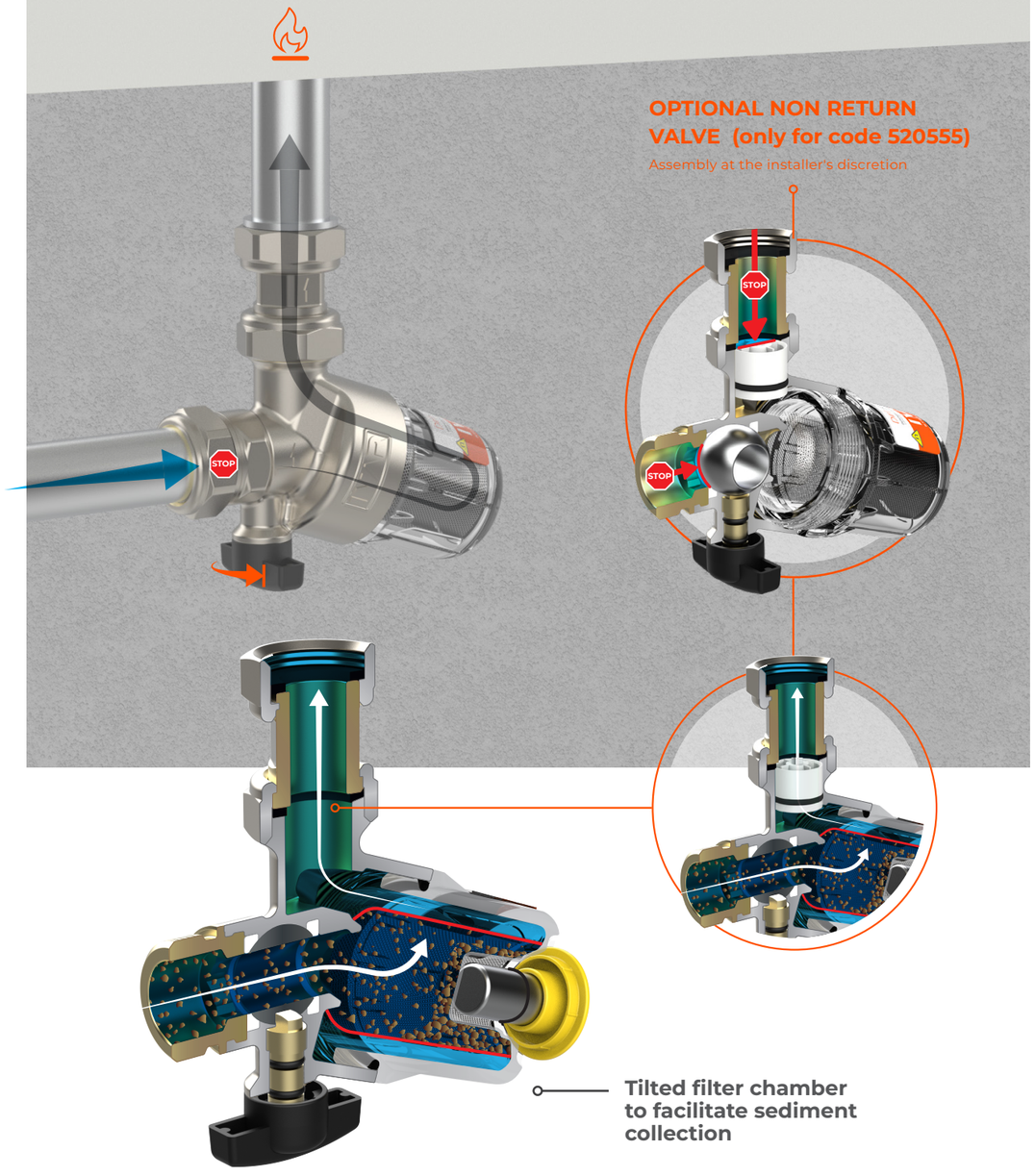

DirtSTOP® MINI traps impurities present in the closed circuit of the heating system. The water is forced to pass through the STAINLESS STEEL filter and the powerful neodymium magnet also traps ferrous impurities, protecting the heat generator pump.

DirtSTOP® MINI

ULTRACOMPACT magnetic dirt separator for under-boiler installation with filter

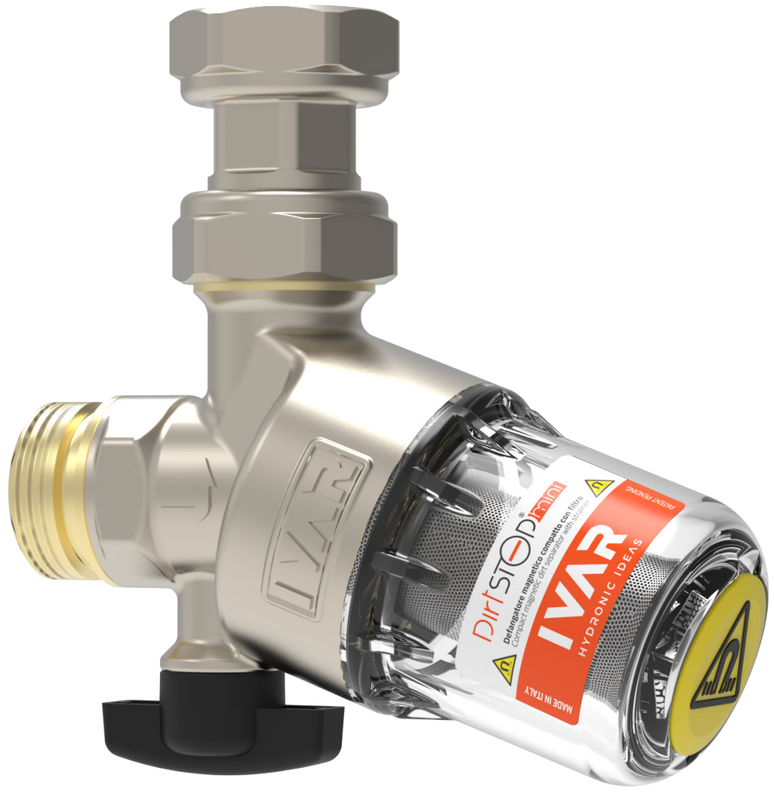

DirtSTOP® MINI is an ultra-compact magnetic dirt separator with filtering action, suitable for installation under the boiler. Thanks to the transparent settling chamber, it is possible to quickly inspect the accumulation of impurities inside.



PROTECTION

FILTRATION

COLLECTION

The metal parts of the heating system are subject to corrosion, which releases ferrous impurities into the water. In the heat generator, these impurities can clog the heat exchanger or be attracted by the permanent magnet of the electronic circulation pumps, causing them to jam.
There may also be other impurities in the heating system that tend to accumulate in parts of the system with a reduced passage section, causing blockages, noise and other malfunctions.
DirtSTOP® MINI helps to keep the heating system in the best possible condition. Periodic cleaning of the dirt separator is quick and easy, without having to empty the system.

Code	Size	Non return valve
520550	3/4” F x 3/4” M	✔
520555	3/4” F x 3/4” M	-

Fluid temperature	0-90 °C
Maximum working pressure	Max 6 bar
Flow coefficient (Kv)	5.0 m^3/h
Mesh filter	800 µm in AISI 304 stainless steel
Compatible fluids	Water or glycol solution (max 50%)
Magnet	Neodymium, magnetic induction B = 1.2 T (12,000 G), diametral polarisation
Filter connections	3/4" M x 3/4" M
Fitting connections	3/4" F swivel x 3/4" F swivel

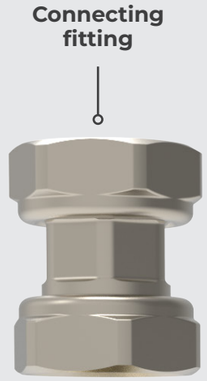

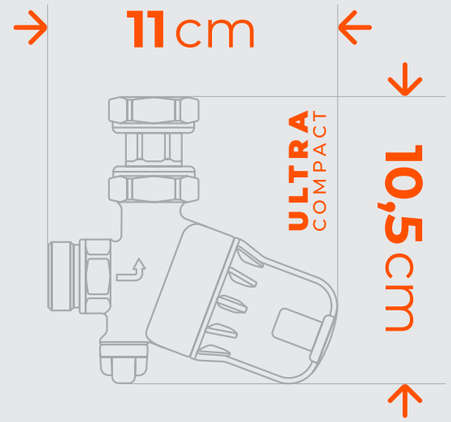



OPTIONAL NON RETURN VALVE (only for code 520555)

Assembly at the installer's discretion

POWERFUL MAGNET
12000 Gauss
to retain magnetite and ferrous particles

FILTER MESH
800 µm
AISI 304 stainless steel

Ultra-resistant and transparent Grilamid® filter chamber: allows you to see when cleaning is required

EASY DISASSEMBLY
using a **15 mm** hex key on the bottom of the glass